Chapter 6
Replaceable Parts

This chapter lists the replaceable parts and assemblies of the HP 110.

The following structure illustrates how replaceable assemblies are related and gives references to the tables and figures for replaceable parts:

HP 110 (table 6-1, figure 6-1).
- Top Case Assembly (table 6-2, figure 6-2).
  - Display Assembly (table 6-3, figure 6-3).
- Base Assembly (table 6-4, figure 6-4).
  - System PCA (table 6-5, figure 9-1).
  - I/O PCA (table 6-6, figure 9-5).
  - Modem PCA (table 6-7, figure 9-9)—A versions only.

For assemblies that differ between A versions and B versions, the "Quantity" column is separated into two parts labelled "A" and "B". Other differences between versions are noted under "Description". (For versions A and AL, the version is indicated on the bottom label. For all B versions, the bottom label indicates "45710B"—press (Shift)/(CTRL)/(Break) simultaneously to momentarily display the version at the end of the serial number.)

You can order replacement parts and assemblies from Hewlett-Packard Corporate Parts Center or from Parts Center Europe.

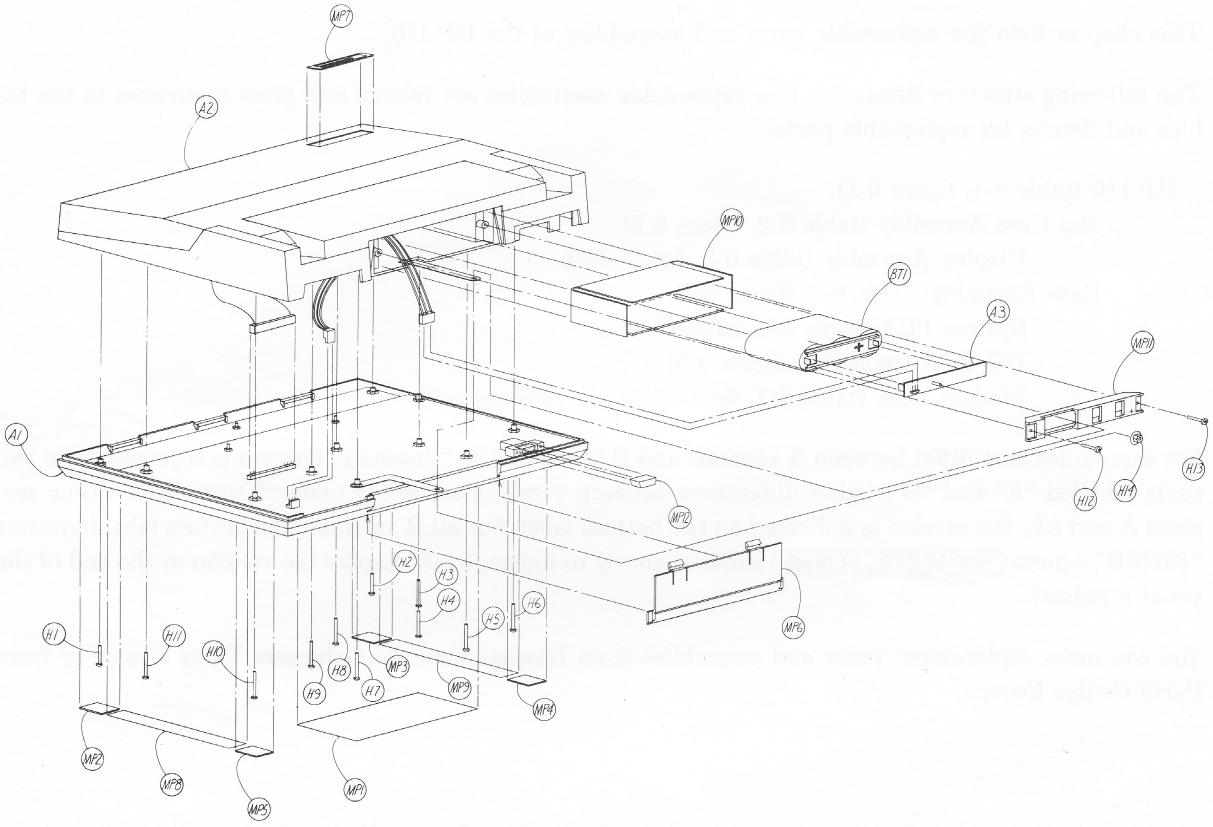

Figure 6-1. HP 110 Exploded View

Table 6-1. HP 110 Replaceable Parts

Reference Designation	HP Part Number	Description	Quantity A	Quantity B
A1*	(table 6-4)	ASSEMBLY, base	1	1
A2*	(table 6-2)	ASSEMBLY, top case	1	1
A3*	00090-60005	ASSEMBLY, PC, terminal block	1	1
A3CR1*	1901-0704	• RECTIFIER, silicon	1	1
A3F1*	2110-0716	• FUSE	1	1
A3S1*	3101-2770	• SWITCH, reset	1	1
BT1	1420-0329	BATTERY	1	1
H1, H2	0515-1878	SCREW, M2.5 × 20	2	2
H3–H11	0515-1881	SCREW, M2.5 × 26	9	9
H12, H13	0515-1882	SCREW, M2.5 × 8	2	2
H14	0535-0063	NUT, M3, flanged	1	1
MP1	00090-80007†	LABEL, bottom (version A—U.S.)	1	–
	00090-80081†	LABEL, bottom (version AL—Canada)	1	–
	00090-80089†	LABEL, bottom (all version B)	–	1
MP2–MP5	00090-80022†	FOOT, rubber	4	4
MP6	00090-40004	COVER, battery	1	1
MP7	00090-80006	LABEL, top	1	1
MP8, MP9	00090-80016†	COVER, screw	2	2
MP10	00090-80017	CUSHION, battery	1	1
MP11	00090-40009	BLOCK, terminal	1	1
MP12	1252-0220	CAP, serial receptacle	1	1
	00090-80086	LABEL, D.O.C. (version AL—Canada)	1	–
	5041-4306	PLUG, modem insert	–	1
	0460-1802	TAPE, battery cable and modem	2	1

* These reference designations are for "top-level" assemblies. They shouldn't be confused with the reference designations for the three main PCAs (A1, A2, and A3) used in other chapters of this manual. The three main PCAs are actually part of the base assembly (table 6-4).

† These parts are included in the following service kits. (The bottom label is different for each kit.)
00090-60919 (version A—U.S.): 25 bottom labels, 50 screw covers, 100 feet.
00090-60942 (version AL—Canada): 5 bottom labels, 10 screw covers, 20 feet.
00090-60943 (all version B): 5 bottom labels, 10 screw covers, 20 feet.

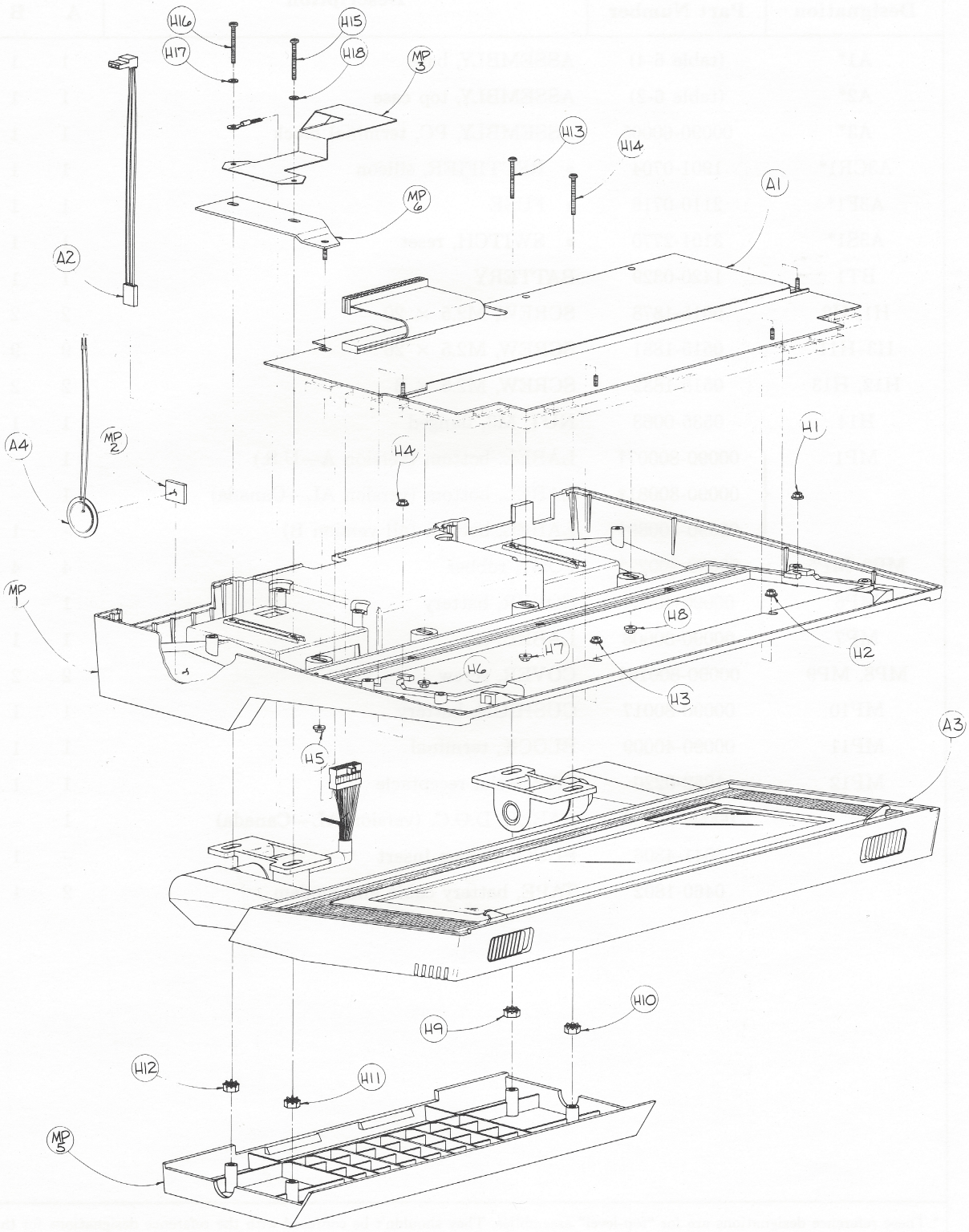

Figure 6-2. Top Case Assembly Exploded View

Table 6-2. Top Case Assembly Replaceable Parts

Reference Designation*	HP Part Number	Description	Quantity A	Quantity B
A1†	00090-60901	ASSEMBLY, keyboard module (all versions)	1	1
	00090-40013	• KEYCAP SET (all version A, version BK—Int'l)	1	1
	00090-80025	• KEYSWITCH	75	75
	00090-80026	• KEYSWITCH, space bar	1	1
	00090-60936	ASSEMBLY, keycap set (version BD—Germany)	–	1
	00090-60937	ASSEMBLY, keycap set (version BF—France)	–	1
	00090-60938	ASSEMBLY, keycap set (version BZ—Italy)	–	1
	00090-60939	ASSEMBLY, keycap set (version BU—U.K.)	–	1
A2†	00090-60032	ASSEMBLY, battery wire	1	1
A3†	(table 6-3)	ASSEMBLY, display	1	1
A4†	00090-60017	ASSEMBLY, transducer	1	1
H1–H8	0535-0063	NUT, M3, flanged	8	8
H9–H12	0535-0062	NUT, M6 locking	4	4
H13–H15, H25	0515-1881	SCREW, M2.5 × 26	4	4
MP1	00090-40001	CASE, top	1	1
MP2	0460-1802	TAPE, double-sided, transducer	1	1
MP3	00090-80047	STRAP, upper ground	1	1
MP5	00090-60030	ASSEMBLY, hinge cover	1	1
MP6	00090-00006	PLATE, ground	1	1
MP7, MP8	3050-0367	WASHER, flat	2	2

* Use the prefix "Top Case A2" with reference designations for parts of the top case assembly.

† These reference designations are for "top case" assemblies. They shouldn't be confused with the reference designations for the three main PCAs (A1, A2, and A3) used in other chapters of this manual. The three main PCAs are actually part of the base assembly (table 6-4).

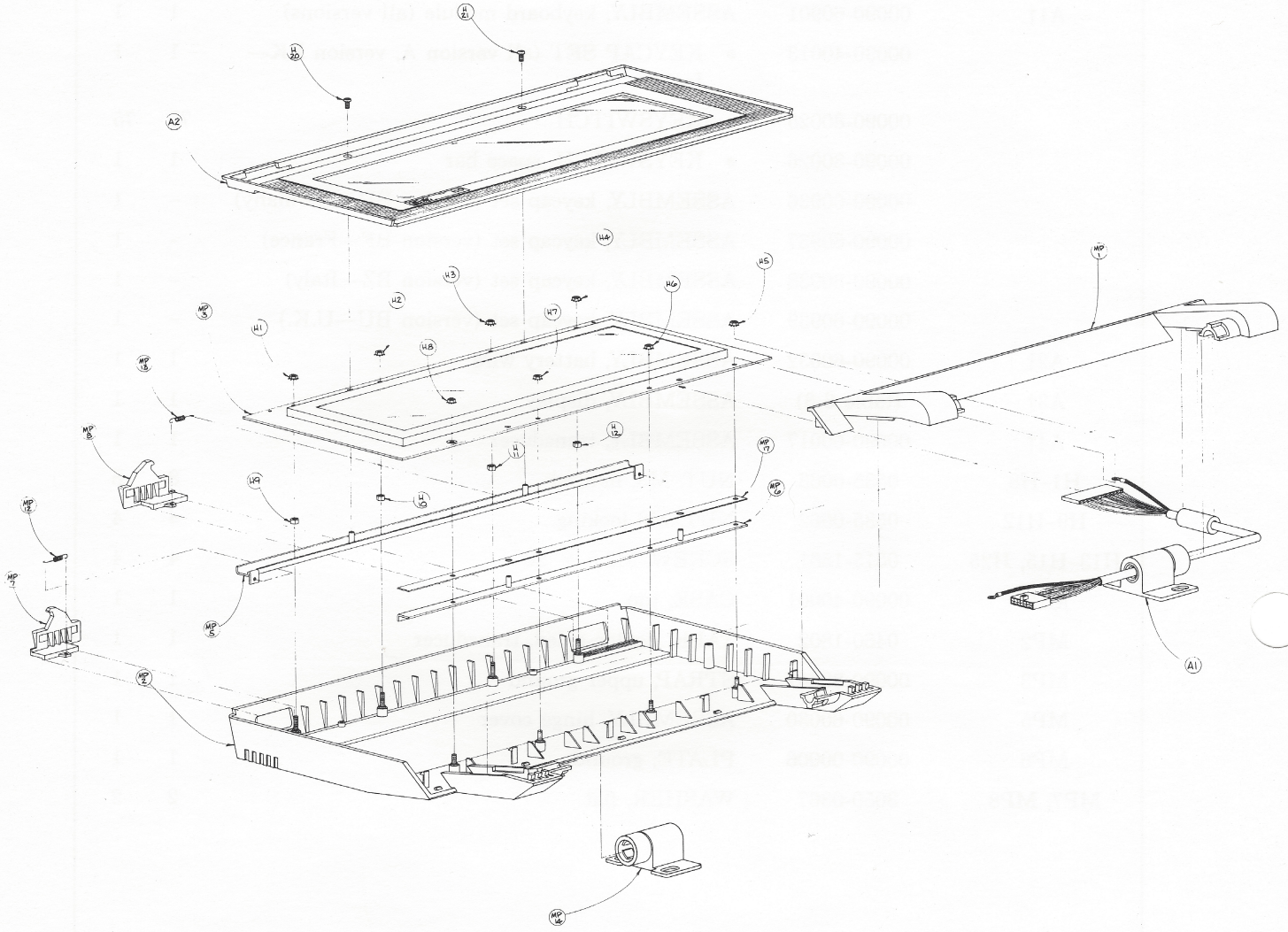

Figure 6-3. Display Assembly Exploded View

Table 6-3. Display Assembly Replaceable Parts

Reference Designation*	HP Part Number	Description	Quantity
A1†	00090-60907	ASSEMBLY, clutch/cable, service	1
A2†	00090-60906	ASSEMBLY, bezel, service	1
	00090-60920	ASSEMBLY, bezel cap/tape, service	1
H1–H8	0535-0063	NUT, M3, flanged	8
H9–H12	00090-80021	SPACER, hex	4
H20, H21	0515-1246	SCREW, M3 × 6	2
MP1	00090-40005	FRONT, display	1
MP2	00090-40006	BACK, display	1
MP3	00090-60902	ASSEMBLY, LCD module, service	1
MP5	00090-00004	BRACKET, display top	1
MP6	00090-00005	BRACKET, display bottom	1
MP7	00090-40007	LATCH, left	1
MP8	00090-40008	LATCH, right	1
MP12, MP13	00090-80032	SPRING, latch	2
MP14	00090-80064	CLUTCH	1
MP17	00090-40010	INSULATOR, display	1
MP23	0470-0913	RTV, adhesive	
	00090-60033	STRAP, ground	1‡

* Use the prefix "Top Case A2A3" with reference designations for parts of the display assembly.

† These reference designations are for "display" assemblies. They shouldn't be confused with the reference designations for the three main PCAs (A1, A2, and A3) used in other chapters of this manual. The three main PCAs are actually part of the base assembly (table 6-4).

‡ Used only with an LCD module that has no ground trace around the edge of the back side.

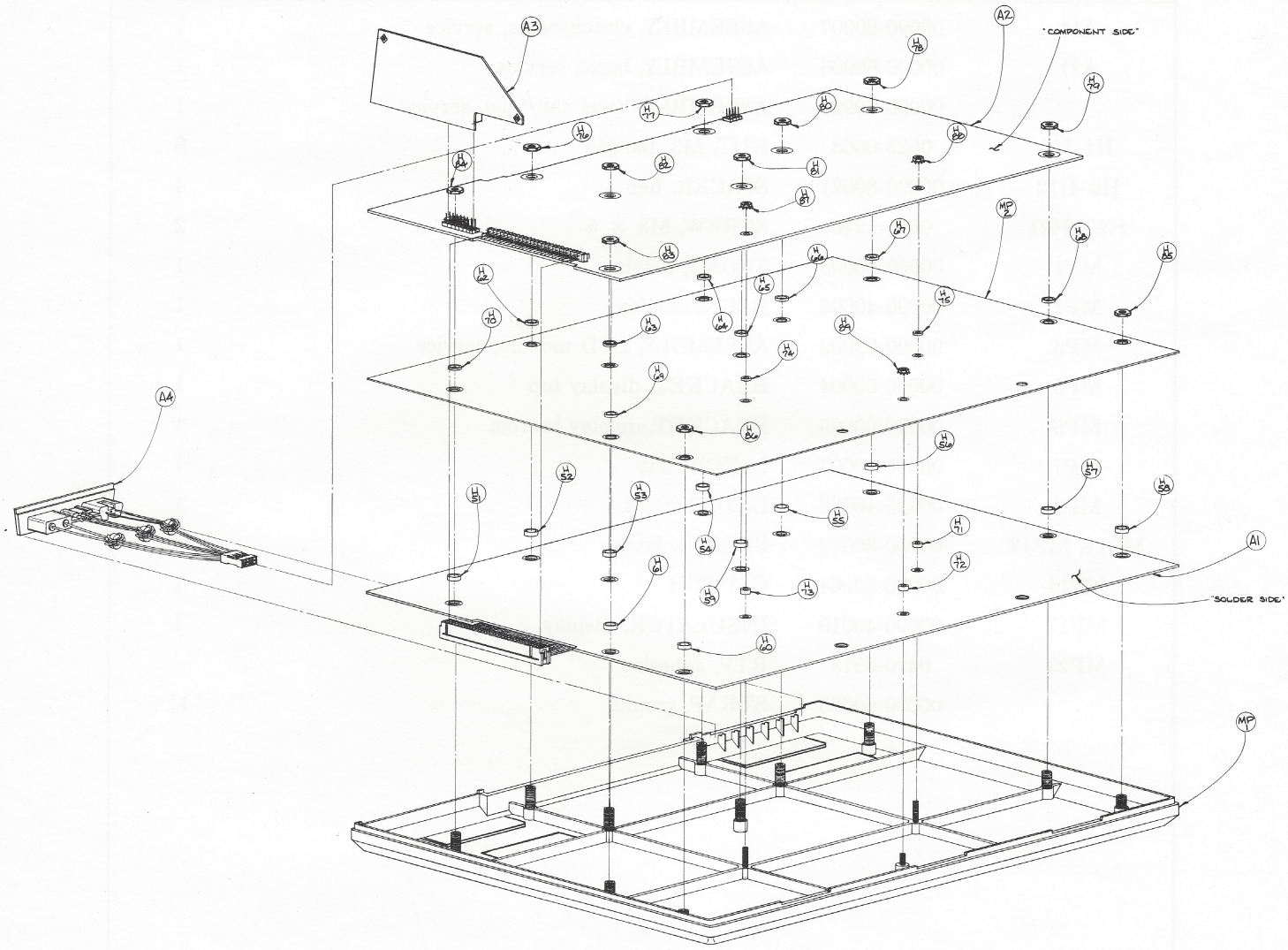

Figure 6-4. Base Assembly Exploded View

Table 6-4. Base Assembly Replaceable Parts

Reference Designation*	HP Part Number	Description	Quantity A	Quantity B
A1	00090-60916† 00090-69006‡	ASSEMBLY, system PC (table 6-5)	1	1
A2	00090-60917† 00090-69002‡	ASSEMBLY, I/O PC (all version A) (table 6-6)	1	–
	00090-60940† 00090-69005‡	ASSEMBLY, I/O PC (all version B) (table 6-6)	–	1
A3	00090-60918†	ASSEMBLY, modem PC (table 6-7)	1	–
A4	00090-60006	ASSEMBLY, I/O plate	1	1
H51–H70	00090-80057	SPACER, 6 × 2.35	20	20
H71–H75	00090-80046	SPACER, 3 × 2.35	5	5
H76–H86	0535-0014	NUT, M6, jam	11	11
H87–H89	0535-0063	NUT, M3, flanged	3	3
MP1	00090-40002	CASE, bottom	1	1
MP2	00090-00002	SHIELD, EMI	1	1
MP3	00090-80045	STRAP, ground, lower	1	1
U28§	(table 6-9)	INTEGRATED CIRCUIT, configuration EPROM, service	1	1
U52-U64§	(table 6-8)	INTEGRATED CIRCUIT, 32K ROM	12	12
	00090-80065	PAD, IC support	4	4

* Use the prefix "Base A1" with reference designations for parts of the base assembly.

† New part.

‡ Exchange part.

§ These components are usually associated with the system or I/O PCA, although they're not included as part of those assemblies.

Table 6-5. System PCA Replaceable Parts

Reference Designation*	HP Part Number	Description	Quantity
C1, C3, C5–C7, C9, C10, C13, C14, C16, C20–C41, C43–C64, C66, C67	0160-5941	CAPACITOR, 0.047 μF, 20%, 100V	56
R1	1810-0201	RESISTOR NETWORK, 100 kΩ	1
R2, R3	1810-0378	RESISTOR NETWORK, 47 kΩ	2
U1	1820-3533	INTEGRATED CIRCUIT, CPU, 80C86	1
U2–U7	1820-3486	INTEGRATED CIRCUIT, latch, 82C82	6
U8–U11	1820-3330	INTEGRATED CIRCUIT, transceiver, 74HC245	4
U12–U17	1820-3079	INTEGRATED CIRCUIT, 3-8 decoder, 74HC138	6
U18, U19, U65	1820-3014	INTEGRATED CIRCUIT, 2-4 decoder, 74HC139	3
U20–U51, U66, U67	1818-3183†	INTEGRATED CIRCUIT, 8K RAM	34
U52-U64	‡	INTEGRATED CIRCUIT, 32K ROM	

* Use the prefix "Base A1A1" with reference designations for components on the system PCA. The last "A1" refers to the system PCA, and corresponds to the reference designations for the three main PCAs (A1, A2, and A3) used in other chapters of this manual.

† Part number 5061-7228+D is equivalent.

‡ Components U52 through U64 (system ROMs) aren't included with the system PCA. They're listed in table 6-4 as part of the base assembly and in table 6-8.

Table 6-6. I/O PCA Replaceable Parts

Reference Designation*	HP Part Number	Description	Quantity A	Quantity B
C1, C2	0160-4805	CAPACITOR, 47 pF, 5%, 100V	2	2
C3, C4	0160-4787	CAPACITOR, 22 pF, 5%, 100V	2	2
C5, C8–C10, C68, C87, C91, C101	0160-4835	CAPACITOR, 0.1 μF, 50V	8	8
C6	0180-3167	CAPACITOR, 1000 μF	1	1
C7, C11, C14	0160-3490	CAPACITOR, 1 μF, 20%, 50V	3	3
C12, C25, C26	0160-4822	CAPACITOR, 1000 pF, 5%, 100V	3	1
C13	0160-4791	CAPACITOR, 10 pF, 5%, 100V	1	1
C15, C69	0160-4832	CAPACITOR, 0.01 μF, 100V	2	2
C16, C17	0160-4812	CAPACITOR, 220 pF, 5%	2	2
C18	0160-2388	CAPACITOR, 0.47 μF, 400V	1	–
C43–C66, C70	0160-5941	CAPACITOR, 0.047 μF, 20%, 100V	25	25
C67	0180-3457	CAPACITOR, 33 μF, 20%, 16V	1	1
C71, C93–C99	0180-2951	CAPACITOR, 33 μF, 16V	8	7
C80	0160-4801	CAPACITOR, 100 pF, 5%	1	1
C81	0160-6145	CAPACITOR, 0.03 μF, DIP	1	1
C88–C90	0160-4810	CAPACITOR, 330 pF, 5%, 100V	3	3
C92	0160-4574	CAPACITOR, 1000 pF, 10%	1	1
C100	0180-3422	CAPACITOR, 10 μF, 10%	1	–
CR1	1906-0284	DIODE BRIDGE, 1A, 50V	1	1
CR2–CR7, CR17–CR22, CR26, CR27	1901-1098	DIODE, switching	14	11
CR13	1901-0734	DIODE, Schottky, 1A, 30V	1	1
CR14	1906-0283	DIODE BRIDGE, 1A, 400V	1	–
CR23–CR25	1901-1080	DIODE, 1N5817	3	3
J1	1251-5269	CONNECTOR, 2 × 25 pin, system PCA	1	1
J2	1251-8214	CONNECTOR, 2 × 20 pin, keyboard	1	1
J3	1251-4926	CONNECTOR, 2 × 4 pin, I/O plate	1	1
J4	1251-7532	JACK, RJ11C, phone	1	–
J5	1251-8906	CONNECTOR, 9 pin, RS-232	1	1
J6	1251-8702	CONNECTOR, 2 × 8 pin, modem PCA	1	–
J8	1252-0025	CONNECTOR, 3 pin, battery	1	1
L1	9140-0975	INDUCTOR, 30 mH, 35 mA	1	1
L3, L4	9100-1625	INDUCTOR, 33 μH, 5%	2	–
MP3	0890-0324	TUBING, flex (for C80)		

Table 6-6. I/O PCA Replaceable Parts (Continued)

Reference Designation*	HP Part Number	Description	Quantity A	Quantity B
Q1–Q3, Q18, Q19, Q30, Q36	1853-0563	TRANSISTOR, 2N3906	7	6
Q4	1853-0558	TRANSISTOR, 2N6554	1	1
Q5, Q7–Q11, Q21, Q24, Q34, Q35, Q37, Q40, Q41	1855-0556	TRANSISTOR, N-channel MOSFET, 60V	13	13
Q6, Q12, Q38	1855-0550	TRANSISTOR, P-channel MOSFET, 30V	3	3
Q13	1853-0559	TRANSISTOR, MPSW55	1	1
Q14, Q15	1853-0569	TRANSISTOR, 2N5087	2	2
Q16, Q17	1854-1040	TRANSISTOR, 2N5088	2	2
Q20	1855-0522	TRANSISTOR, P-channel MOSFET	1	1
Q25	1855-0557	TRANSISTOR, dual-gate MOSFET, 20V	1	1
Q28	1853-0565	TRANSISTOR, 2N4403	1	1
Q31	1855-0551	TRANSISTOR, N-channel MOSFET, 500V	1	–
Q33	1854-1028	TRANSISTOR, 2N3904	1	–
Q39	1855-0555	TRANSISTOR, N-channel MOSFET, 30V	1	1
R1	0683-1035	RESISTOR, 10 kΩ, 5%, ¼W	1	1
R2, R8, R19, R29, R56, R149, R150, R163, R164	0683-1045	RESISTOR, 100 kΩ, 5%, ¼W	9	9
R3, R5, R10, R21, R52	0683-4735	RESISTOR, 47 kΩ, 5%, ¼W	5	5
R4	0683-4705	RESISTOR, 47 ohm, 5%, ¼W	1	1
R6	0683-2235	RESISTOR, 22 kΩ, 5%, ¼W	1	1
R7, R9	0683-4715	RESISTOR, 470 ohm, 5%, ¼W	2	2
R11	0698-3160	RESISTOR, 31.6 kΩ, 1%, ⅛W	1	1
R12, R14, R48	0757-0442	RESISTOR, 10 kΩ, 1%, ⅛W	3	3
R13, R15	0698-3161	RESISTOR, 38.3 kΩ, 1%, ⅛W	2	2
R16	0757-0467	RESISTOR, 121 kΩ, 1%, ⅛W	1	1
R18	0699-1209	RESISTOR, 43.2 kΩ, 0.25%	1	1
R20	0698-3193	RESISTOR, 10.0 kΩ, 1%, ⅛W	1	1
R22	0757-0200	RESISTOR, 5.62 kΩ, 1%, ⅛W	1	1
R25	0683-2255	RESISTOR, 2.2 MΩ, 5%, ¼W	1	1
R26, R27	0683-3345	RESISTOR, 330 kΩ, 5%, ¼W	2	2

Table 6-6. I/O PCA Replaceable Parts (Continued)

Reference Designation*	HP Part Number	Description	Quantity A	Quantity B
R28	0683-3315	RESISTOR, 330 ohm, 5%, ¼W	1	1
R30, R37, R40, R100, R101, R116, R117	0683-1055	RESISTOR, 1 MΩ, 5%, ¼W	7	5
R31, R32, R161	0683-2245	RESISTOR, 220 kΩ, 5%, ¼W	3	3
R33	0699-1254	RESISTOR, 536 kΩ, 1%, ⅛W	1	1
R34	0698-3454	RESISTOR, 215 kΩ, 1%, ⅛W	1	1
R35	0698-8827	RESISTOR, 1 MΩ, 1%, ⅛W	1	1
R36, R41	0683-1545	RESISTOR, 150 kΩ, 5%, ¼W	2	2
R38, R39, R42, R157–R160	0683-4745	RESISTOR, 470 kΩ, 5%, ¼W	7	7
R43	0698-4493	RESISTOR, 34.0 kΩ, 1%, ⅛W	1	1
R44	0683-6835	RESISTOR, 5%, ¼W	1	1
R45	0683-1345	RESISTOR, 130 kΩ, 5%, ¼W	1	1
R46	0683-2745	RESISTOR, 270 kΩ, 5%, ¼W	1	1
R49	0757-0461	RESISTOR, 68.1 kΩ, 1%, ⅛W	1	1
R50	0757-0444	RESISTOR, 12.1 kΩ, 1%, ⅛W	1	1
R51	0683-1525	RESISTOR, 1.5 kΩ, 5%, ¼W	1	1
R53, R54	0757-0465	RESISTOR, 100 kΩ, 1%, ⅛W	2	2
R57, R58, R127–R129	0683-4725	RESISTOR, 4.7 kΩ, 5%, ¼W	5	4
R64	0683-1815	RESISTOR, 180 ohm, 5%, ¼W	1	1
R65–R69, R124	1810-0378	RESISTOR NETWORK, 47 kΩ	6	6
R70, R71	0683-1535	RESISTOR, 15 kΩ, 5%, ¼W	2	2
R72, R73	0698-3446	RESISTOR, 383 ohm, 1%, ⅛W	2	2
R74	0812-0057	RESISTOR, 33 ohm, 5%, ½W	1	–
R76	0699-0922	RESISTOR, 4.7 kΩ, 5%, 2W	1	–
R77	0683-5635	RESISTOR, 56 kΩ, 5%, ¼W	1	–
R99	0683-2215	RESISTOR, 220 ohm, 5%, ¼W	1	–
R115	0683-1065	RESISTOR, 10 MΩ, 5%, ¼W	1	1
R121	0683-1515	RESISTOR, 150 ohm, 5%, ¼W	1	1
R151	0683-3935	RESISTOR, 39 kΩ, 5%, ¼W	1	1
R152	1810-0367	RESISTOR NETWORK, 4.7 kΩ, 2%, ⅛W	1	1
RT1	0837-0284	THERMISTOR, 2 kΩ, 5%	1	1

Table 6-6. I/O PCA Replaceable Parts (Continued)

Reference Designation*	HP Part Number	Description	Quantity A	Quantity B
T1	9100-4226	TRANSFORMER, HP-IL	1	1
T2	9100-4380	TRANSFORMER, modem	1	–
T3	00090-20001	TRANSFORMER, oscillator	1	–
U1	1820-3484	INTEGRATED CIRCUIT, PPU, MC146805G2	1	1
U2	1LK5-0001	INTEGRATED CIRCUIT, multi-controller	1	1
U3	1LK6-0001	INTEGRATED CIRCUIT, LCD controller	1	1
U4	1LB3-0003	INTEGRATED CIRCUIT, HP-IL	1	1
U5	1818-3183	INTEGRATED CIRCUIT, 8K RAM, display RAM	1	1
U6, U7	1820-3330	INTEGRATED CIRCUIT, transceiver, 74HC245	2	2
U8–U15, U36	1820-3486	INTEGRATED CIRCUIT, latch, 82C82	9	9
U16	1820-3546	INTEGRATED CIRCUIT, shift register, 74HC299N	1	1
U17	1820-3181	INTEGRATED CIRCUIT, shift register, 74HC165	1	1
U18	1820-3081	INTEGRATED CIRCUIT, D-type flip-flop, 74HC74	1	1
U19	1820-3488	INTEGRATED CIRCUIT, clock, 82C84	1	1
U20	1820-3208	INTEGRATED CIRCUIT, counter, 74HC393	1	1
U21	1820-3014	INTEGRATED CIRCUIT, 2-4 decoder, 74HC139	1	1
U22	1820-3079	INTEGRATED CIRCUIT, 3-8 decoder, 74HC138	1	1
U23, U24	1820-2924	INTEGRATED CIRCUIT, quad NOR, 74HC02	2	2
U25	1820-3097	INTEGRATED CIRCUIT, quad AND, 74HC08	1	1
U26	1826-1162	INTEGRATED CIRCUIT, comparator, LP311N	1	1
U27	1826-0666	INTEGRATED CIRCUIT, comparator, LM339A	1	1
U28	†	INTEGRATED CIRCUIT, configuration EPROM		
U30	1990-0494	INTEGRATED CIRCUIT, opto-isolator	1	–
U33	1820-3487	INTEGRATED CIRCUIT, tone generator, MC14410	1	–
U38	1820-1745	INTEGRATED CIRCUIT, quad NOR, MC14001	1	1
U39	1820-0509	INTEGRATED CIRCUIT, RS-232 driver, MC1488L	1	1
U40	1820-3185	INTEGRATED CIRCUIT, receiver, 74HC14N	1	1
U41, U42	1820-3177	INTEGRATED CIRCUIT, multiplexers, 74HC157N	2	1
VR1	1902-0950	DIODE, zener, 4.7V, 5%	1	1
VR2	1902-0962	DIODE, zener, 15V, 5%	1	1
VR3	1826-1167	DIODE, zener, 1.235V	1	1

Table 6-6. I/O PCA Replaceable Parts (Continued)

Reference Designation*	HP Part Number	Description	Quantity A	Quantity B
VR4, VR5	1902-0953	DIODE, zener, 6.2V, 5%	2	2
VR6, VR7	1902-0970	DIODE, zener, 33V, 0.4W	2	2
VR8	1902-0967	DIODE, zener, 24V, 5%	1	–
VR9	0837-0281	DIODE, suppression	1	–
VR10	0837-0277	DIODE, suppression	1	–
VR11	1902-0958	DIODE, zener, 10V, 5%	1	–
VR12	1902-0952	DIODE, zener, 5.6V, 0.4W	1	1
W5	1258-0235	JUMPER (replaces U41)	–	1
XU28	1200-0567	SOCKET, 28 pin, for U28	1	1
Y1	0410-1522	CRYSTAL, 1 MHz	1	1
Y2	0410-1519	CRYSTAL, 16 MHz	1	1

* Use the prefix "Base A1A2" with reference designations for components on the I/O PCA. The "A2" refers to the I/O PCA, and corresponds to the reference designations for the three main PCAs (A1, A2, and A3) used in other chapters of this manual.

† Component U28 (configuration EPROM) isn't included with the I/O PCA. It's listed in table 6-4 as part of the base assembly and in table 6-9.

Table 6-7. Modem PCA Replaceable Parts

Reference Designation*	HP Part Number	Description	Quantity
C20	0160-5612	CAPACITOR, 4700 pF, 5%	1
C22, C28, C30, C31, C33, C40, C41	0160-4835	CAPACITOR, 100 nF, 50V	7
C23	0160-4801	CAPACITOR, 100 pF, 5%	1
C27, C29	0180-3422	CAPACITOR, 10 μF, 10%	2
C37	0160-4810	CAPACITOR, 330 pF, 5%, 100V	1
C38	0160-4832	CAPACITOR, 10 nF, 100V	1
C39	0160-4812	CAPACITOR, 220 pF, 5%	1
C42	0180-3440	CAPACITOR, 47 μF, 10%	1
CR15, CR16	1901-1098	DIODE, switching	2
J7	1251-8907	RECEPTACLE, 16 pin	1
Q32	1853-0563	TRANSISTOR, 2N3906	1
R78, R79	0683-2235	RESISTOR, 22 kΩ, 5%, ¼W	2
R80, R104	0683-4715	RESISTOR, 470 ohm, 5%, ¼W	2
R81	0683-8235	RESISTOR, 82 kΩ, 5%, ¼W	1
R82, R96	0683-3335	RESISTOR, 33 kΩ, 5%, ¼W	2
R83, R118	0683-4735	RESISTOR, 47 kΩ, 5%, ¼W	2
R84	0683-2715	RESISTOR, 270 ohm, 5%, ¼W	1
R85	0757-0440	RESISTOR, 7.5 kΩ, 1%, ⅛W	1
R86, R123	0698-3280	RESISTOR, 63.4 kΩ, 1%, ⅛W	2
R88	2100-3214	RESISTOR, variable, 100 kΩ	1
R89	0757-0444	RESISTOR, 12.1 kΩ, 1%, ⅛W	1
R90	0757-0467	RESISTOR, 121 kΩ, 1%, ⅛W	1
R91	0683-1055	RESISTOR, 1 MΩ, 5%, ¼W	1
R92	0683-3325	RESISTOR, 3.3 kΩ, 5%, ¼W	1
R93	0683-8245	RESISTOR, 820 kΩ, 5%, ¼W	1
R94, R102	0683-5635	RESISTOR, 56 kΩ, 5%, ¼W	2
R95	0683-1535	RESISTOR, 15 kΩ, 5%, ¼W	1
R97	0683-3345	RESISTOR, 330 kΩ, 5%, ¼W	1
R98, R106	0683-5625	RESISTOR, 5.6 kΩ, 5%, ¼W	2
R103	0698-3458	RESISTOR, 348 kΩ, 1%, ⅛W	1
R119	0683-1545	RESISTOR, 150 kΩ, 5%, ¼W	1

Table 6-7. Modem PCA Replaceable Parts (Continued)

Reference Designation*	HP Part Number	Description	Quantity
R120	0683-2225	RESISTOR, 2.2 kΩ, 5%, ¼W	1
R130	0683-3935	RESISTOR, 39 kΩ, 5%, ¼W	1
U31	1820-3721	INTEGRATED CIRCUIT, filter	1
U32	1820-2166	INTEGRATED CIRCUIT, modem, MC14412VP	1
U34	1826-0346	INTEGRATED CIRCUIT, op-amp, LM358	1
U35	1826-0138	INTEGRATED CIRCUIT, comparator	1
U37	1820-3097	INTEGRATED CIRCUIT, quad AND, 74HC08	1

* Use the prefix "Base A1A3" with reference designations for components on the modem PCA. The "A3" refers to the modem PCA, and corresponds to the reference designations for the three main PCAs (A1, A2, and A3) used in other chapters of this manual.

Table 6-8. System ROMs

Reference Designation	HP Part Number	Function/Revision
U52, U53	U52: 1LJ8-0017 U53: 1LJ8-0018	LOTUS 1-2-3.
U54, U55	U54: 1LJ8-0019 U55: 1LJ8-0020	Diagnostics; I/O operating system; HP-IL drivers; disc copying, formatting, checking; printing.
U56, U57	U56: 1LJ8-0009 U57: 1LJ8-0010	LOTUS 1-2-3; MemoMaker; Terminal 0; disc drivers.
U58, U59	U58: 1LJ8-0011 U59: 1LJ8-0012	LOTUS 1-2-3; LOTUS 1-2-3 help.
U60, U61	U60: 1LJ8-0013 U61: 1LJ8-0014	HPLINK; P.A.M. help, menu, commands.
U62, U63	U62: 1LJ8-0015 U63: 1LJ8-0016 U62: 1LJ8-0038 U63: 1LJ8-0039	P.A.M. startup; binary directory; MS-DOS; I/O operating system; startup code. Revised June 1984: Read mass storage RAM (drive A).

Table 6-9. Configuration EPROMs

Configuration EPROM HP Part Number (Service)	System ROM HP Part Numbers	
00090-60908* (version A—U.S.)	U52: 1LJ8-0017	U53: 1LJ8-0018
	U54: 1LJ8-0019	U55: 1LJ8-0020
	U56: 1LJ8-0009	U57: 1LJ8-0010
	U58: 1LJ8-0011	U59: 1LJ8-0012
	U60: 1LJ8-0013	U61: 1LJ8-0014
	U62: 1LJ8-0015	U63: 1LJ8-0016
00090-60945 (all version A)	U52: 1LJ8-0017	U53: 1LJ8-0018
00090-60925* (all version A)	U54: 1LJ8-0019	U55: 1LJ8-0020
00090-60931 (version BK—International)	U56: 1LJ8-0009	U57: 1LJ8-0010
00090-60932 (version BD—Germany)	U58: 1LJ8-0011	U59: 1LJ8-0012
00090-60933 (version BF—France)	U60: 1LJ8-0013	U61: 1LJ8-0014
00090-60934 (version BZ—Italy)	U62: 1LJ8-0038	U63: 1LJ8-0039
00090-60935 (version BU—U.K.)		

* Obsolete revision. EPROM isn't available. Repair by updating EPROM and appropriate ROMs to newer revision.